hansgrohe

Focus
Single lever basin mixer 190 with pop-up waste set
Surfaces: **Chrome** Article Number: **31608000**

Description

product features

- consists of: single lever basin mixer, waste set
- ComfortZone 190
- projection 159 mm
- normal spray
- flow rate at 3 bar: 5 l/min
- ceramic cartridge
- temperature limitation adjustable
- suitable for continuous flow water heaters
- pop-up waste set G 1¼
- material waste set: metal
- connection type: G ⅜ connections
- connection dimension: DN15

Technology

Product image

Scale drawing

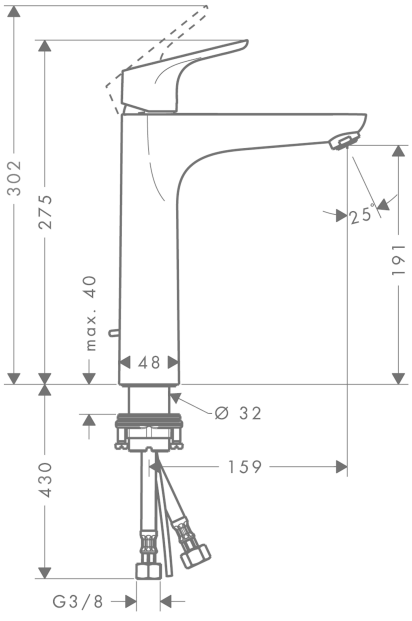
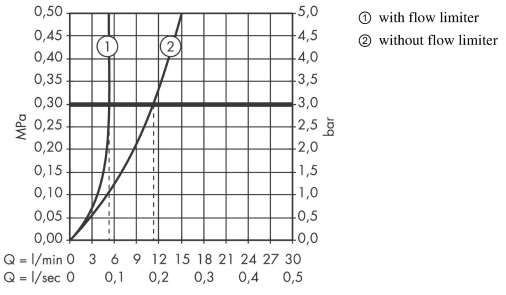
Flowchart