hansgrohe

Talis M51
Single lever kitchen mixer 260, 1jet
Surfaces: **Chrome** Article Number: **72810000**

Description

product features

- ComfortZone 260
- swivel range adjustable in 3 steps 110°, 150° or 360°
- normal spray
- connection dimension: DN15
- maximum flow rate at 3 bar: 10 l/min
- ceramic cartridge
- connection type: G ⅜ connections
- suitable for continuous flow water heaters

Technology

Product image

Scale drawing

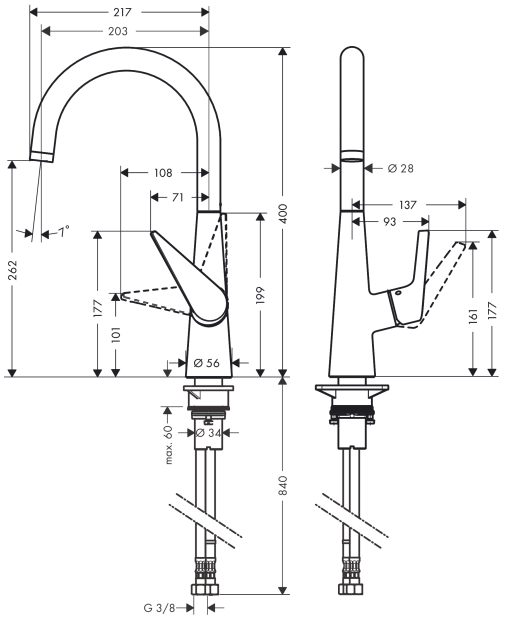
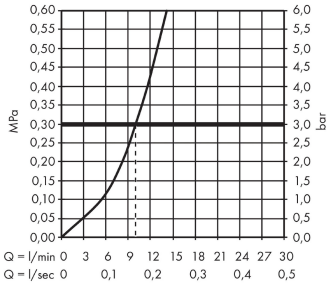
Flowchart